Workplace-system luminaire Tameto SAHQ 88 D

112979000-00555694

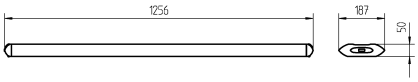

GST 18i3S

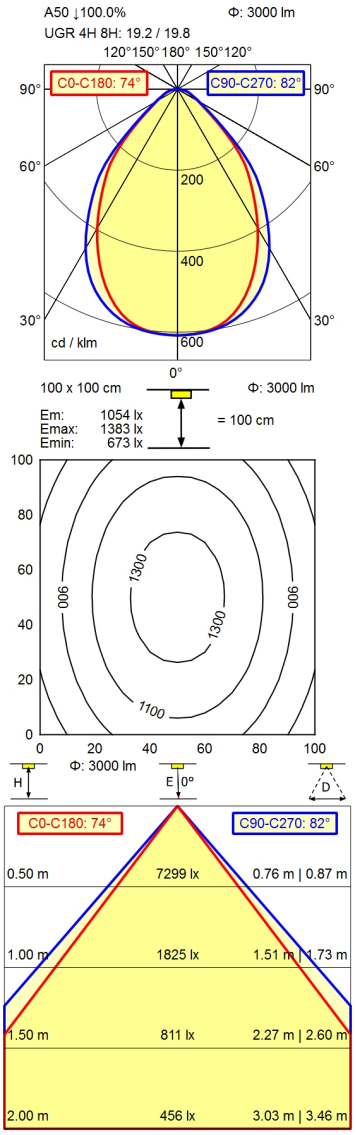

Light source	LED
Work equipment	Electronic ballast
Connected load	220 - 240 V; AC; 50 Hz; 60 Hz
Power consumption	ca. 33 W
Luminous flux	approx. 3.000 lm
Luminous efficiency	approx. 90 lm/W
Light type/-color	Cold white
Colour temperatur	approx. 4.000 K
Color rendering index	CRI ≥ 90; R9 ≥ 50
Light distribution	Direct; Symmetric
Direct ratio	approx. 100 %
Beam angle	75°
Chromaticity tolerance LED	< 3 SDCM
Glare control	Conical prismatic screen
Luminance (L65)	≤ 3.800 cd/m²
Unified glare rating (4H 8H)	≤ 22
System of protection	IP 20
Class of protection	I
Technology	Switchable; -
Operation	Rocker switch
Housing	Aluminium/plastic; Anodised; Aluminium coloured anodised
Light source cover	Structured; Plastic
Weight (net)	ca. 5,8 kg
Mains lead	ca. 0,3 m; Built-in plug; Connection box; GST 18i3S
Design	mounted version
Fastening	Screw down lash
Decorative contrast side parts	Black
Special features	Through-wired

© 20/08/2023 H.Waldmann GmbH & Co. KG

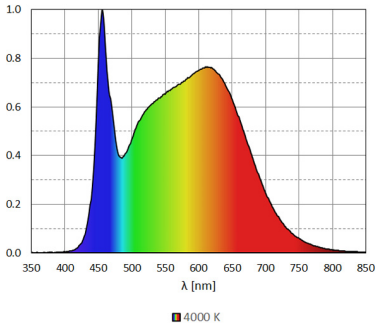

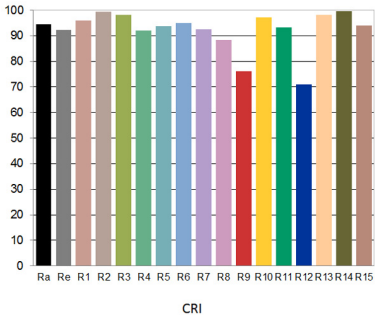

© 20/08/2023 H.Waldmann GmbH & Co. KG